SMITH® JAY R. SMITH MFG. CO.®
MEMBER OF MORRIS GROUP INTERNATIONAL
POST OFFICE BOX 3237
MONTGOMERY, ALABAMA 36109-0237 (USA)
TEL: 334-277-8520 FAX: 888-377-7818 www.jrsmith.com
CUSTOMER DRIVEN SINCE 1926
MEMBER OF:

LOCATION

GREASE INTERCEPTORS

GREASE INTERCEPTORS WITH EXTENSION

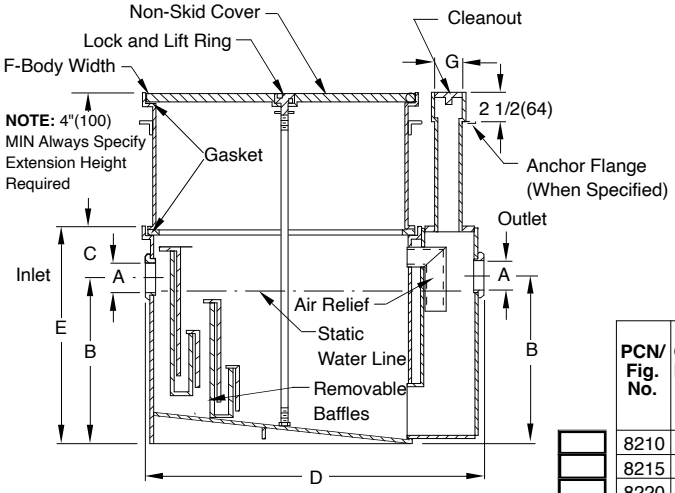

Grease interceptor is a 8010-8050 series basic unit. Adding an extension changes the figure number to 8210-8250.

WHEN ORDERING, SPECIFY HEIGHT REQUIRED FROM TOP OF INTERCEPTOR TO TOP OF EXTENSION USING SUFFIX NUMBER FOR EXTENSION HEIGHT. EXAMPLE: FIG. 8225 WITH 6"(150) EXTENSION -SPECIFY FIG. 8225 (-E06)

Figs. 8010 thru 8050 carry the Plumbing and Drainage Institute Certification Seal Certifying conformance to Grease Interceptor Standard PDI-G101.

PCN/ Fig. No.	GPM Flow Rate	Grease Cap Lbs.	Inlet and Outlet Size	Dimensions					C.O. Plug Size
				Roughing Dimensions			Body		
							Height	Width	
			A*	B	C	D	E	F	G
8210	10	20	02(50)	9 1/2(240)	3 3/4(95)	21 1/4(540)	13 1/4(335)	11 1/2(290)	2(51)
8215	15	30	02(50)	12(305)	3 1/2(89)	25(635)	15 1/2(395)	13 1/2(345)	2(51)
8220	20	40	03(75)	13(330)	4(100)	28 1/2(725)	17(430)	15 3/4(400)	2(51)
8225	25	50	03(75)	15 1/4(390)	4 1/2(115)	30(760)	19 3/4(500)	16 3/4(425)	2(51)
8235	35	70	03(75)	16(405)	5(125)	32 1/2(825)	21(535)	18 1/4(465)	2(51)
8250	50	100	03(75)	17 1/2(445)	6 3/4(170)	35 1/2(900)	24 1/4(615)	20 3/4(525)	2(51)

*Available with larger inlet and outlet when specified.

REGULARLY FURNISHED:
Steel Interceptor and Extension with Gray Duco Coating Inside and Outside and Flow Control Fitting.

NOTE: 2"(51) must be added to dimension D and F for clearance of extension clamps.

NOTE: Dimensions shown in parentheses are in millimeters.

VARIATIONS:
- Anchor Flange -F
- Cover Recessed for Terrazzo Ceramic or Quarry Tile -QC
- Cover Recessed for Vinyl or Asphalt Tile -TC
- Flange and Flashing Clamp -F-C
- Lift Out Sediment Bucket -B
- NO-HUB Adaptor (2) Req'd (Specify Fig. 2646Y)
- Traffic Rated Cover-H20

OPTIONAL MATERIALS:
- Acid Resistant Coating Inside - ARI
- Acid Resistant Coating Outside - ARO
- Acid Resistant Coating Inside and Outside - ARIO
- Aluminum Cover -AC

NOTE: It is the responsibility of the installer to check all parts (internal and external) to verify they are in their proper operating order and location.

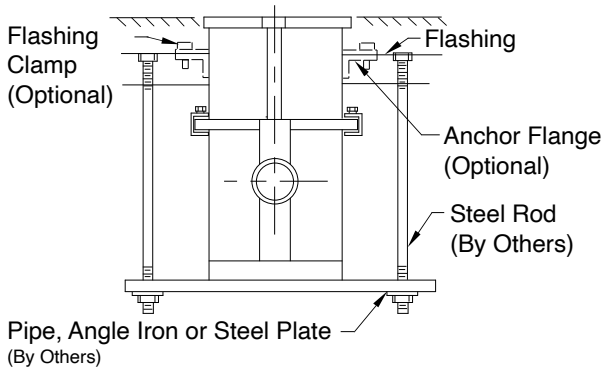

INSTALLATION NOTE

The Steel Extension supplied with the 8200 Series Interceptor is designed to increase the roughing dimension from the Inlet-Outlet centerline to the finished floor. The Extension and Anchoring Flange should not be used to support the unit. When installed in ground floor locations, the Interceptor must rest on solid ground or on some suitable concrete pad. If the 8200 Series Interceptor is installed in an upper floor (suspended in the ceiling below), a suitable method of supporting the entire unit must be provided and meet the approval of the structural engineer and architect. The installation sketch shows a typical Interceptor with Extension and one method of supporting the entire weight. Support of an interceptor, whether supplied with a cradle or independently, is essential for safety and functional integrity of the installation. Upon request, Jay R. Smith Mfg. Co. will provide the weight of the specific unit. Additional weight must be added to compensate for the weight of the liquid/grease when full and in the flowing mode of operation. Also shown are the "When Specified" options of an Anchor Flange and Flashing Clamp.

REV.	DATE	DESCRIPTION	BY	CKD. BY
N	7-27-23	Removed Function	HS	CL
M	11-29-18	Revised Note, Added Note	TBW	JM
L	1-22-18	Revised Callout	TBW	CL
K	1-19-18	Revised Variations, Removed Note	TBW	CL

WEIGHT POUNDS

VOLUME CUBIC FEET

FIGURE NUMBER **8200 SERIES**

N | DRAWING NUMBER S8200 SERIES | SIZE A | SCALE: NONE | DATE: 4-24-85 | APPROVED BY: KG | CHECKED BY: CR | DRAWN BY: VGD | 8200 SERIES | FIGURE NUMBER

WE CAN ASSUME NO RESPONSIBILITY FOR USE OF SUPERSEDED OR VOID DATA

DIMENSIONS ARE SUBJECT TO MANUFACTURERS TOLERANCE AND CHANGE WITHOUT NOTICE

WARNING: Cancer and Reproductive Harm - www.P65Warnings.ca.gov